LUDLUM MODEL 2000
SCALER

March 2015

Serial Number 195271 and Succeeding

Serial Numbers

LUDLUM MODEL 2000
SCALER

March 2015

Serial Number 195271 and Succeeding

Serial Numbers

LUDLUM MEASUREMENTS, INC
501 OAK STREET, P.O. BOX 810
SWEETWATER, TEXAS 79556
325-235-5494, FAX: 325-235-4672

STATEMENT OF WARRANTY

Ludlum Measurements, Inc. warrants the products covered in this manual to be free of defects due to workmanship, material, and design for a period of twelve months from the date of delivery. The calibration of a product is warranted to be within its specified accuracy limits at the time of shipment. In the event of instrument failure, notify Ludlum Measurements to determine if repair, recalibration, or replacement is required.

This warranty excludes the replacement of photomultiplier tubes, G-M and proportional tubes, and scintillation crystals which are broken due to excessive physical abuse or used for purposes other than intended.

There are no warranties, express or implied, including without limitation any implied warranty of merchantability or fitness, which extend beyond the description of the face there of. If the product does not perform as warranted herein, purchaser's sole remedy shall be repair or replacement, at the option of Ludlum Measurements. In no event will Ludlum Measurements be liable for damages, lost revenue, lost wages, or any other incidental or consequential damages, arising from the purchase, use, or inability to use product.

RETURN OF GOODS TO MANUFACTURER

If equipment needs to be returned to Ludlum Measurements, Inc. for repair or calibration, please send to the address below. All shipments should include documentation containing return shipping address, customer name, telephone number, description of service requested, and all other necessary information. Your cooperation will expedite the return of your equipment.

LUDLUM MEASUREMENTS, INC.
ATTN: REPAIR DEPARTMENT
501 OAK STREET
SWEETWATER, TX 79556

800-622-0828 325-235-5494
FAX 325-235-4672

REV #	ALTERATIONS	DATE	BY
1	VALID	08/28/03	PW
2	REMOVED CE MARK	4/10/06	CMC

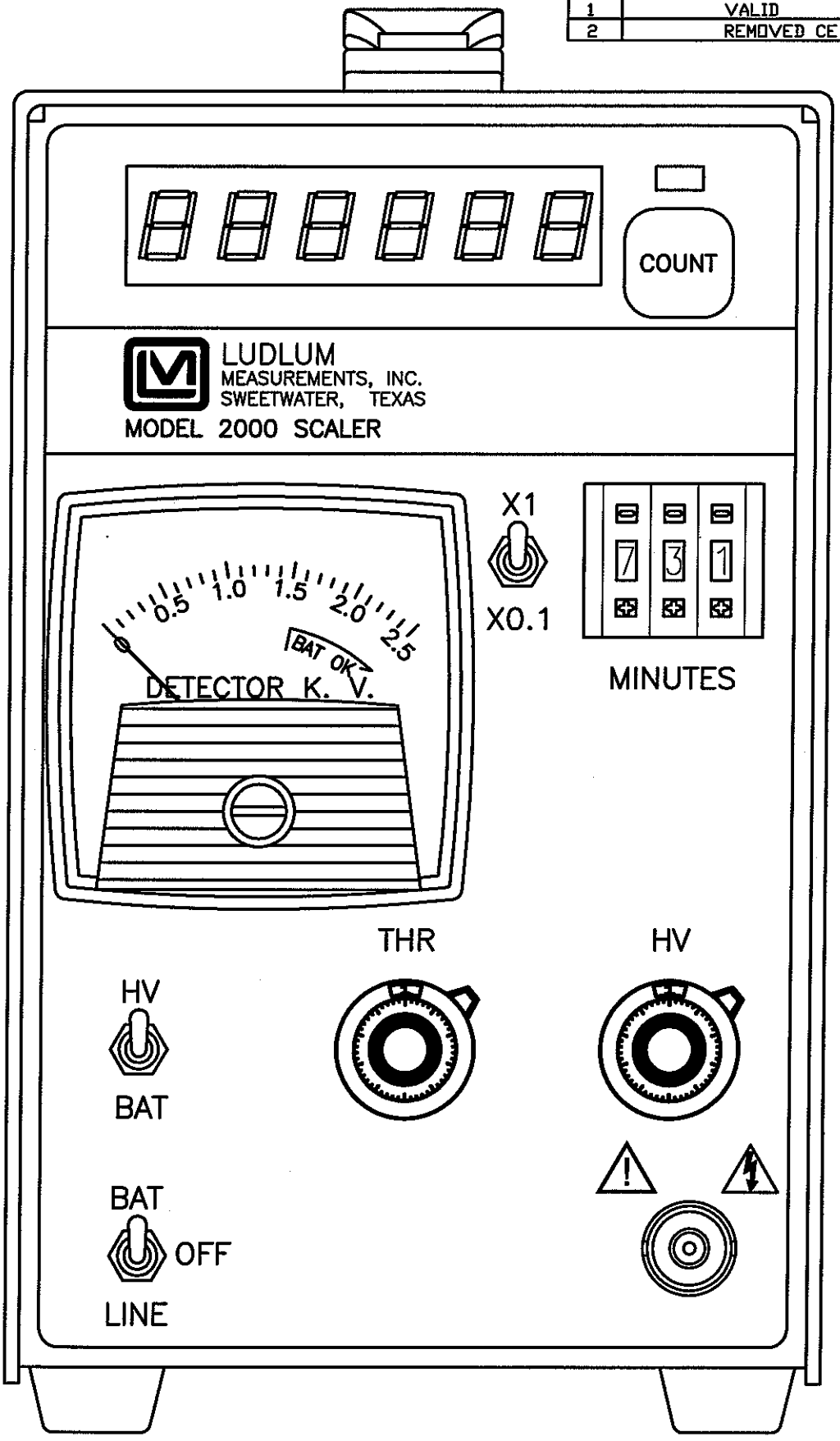

PART NO: 4167-408			
DWN: CMC DATE: 4/10/06	CHECKED	APPROVED: 4/10/06	
TITLE: MODEL 2000			
LUDLUM MEASUREMENTS, INC. 501 OAK STREET SWEETWATER, TEXAS 79556		SERIES: 167	SHEET: 408

REV #	ALTERATIONS	DATE	BY
	VALID	10/11/01	DSW
2	ADDED "CE" MARK	4/2/05	CMC
3	ADDED DO NOT DISCARD SYMBOL	4/10/06	CMC

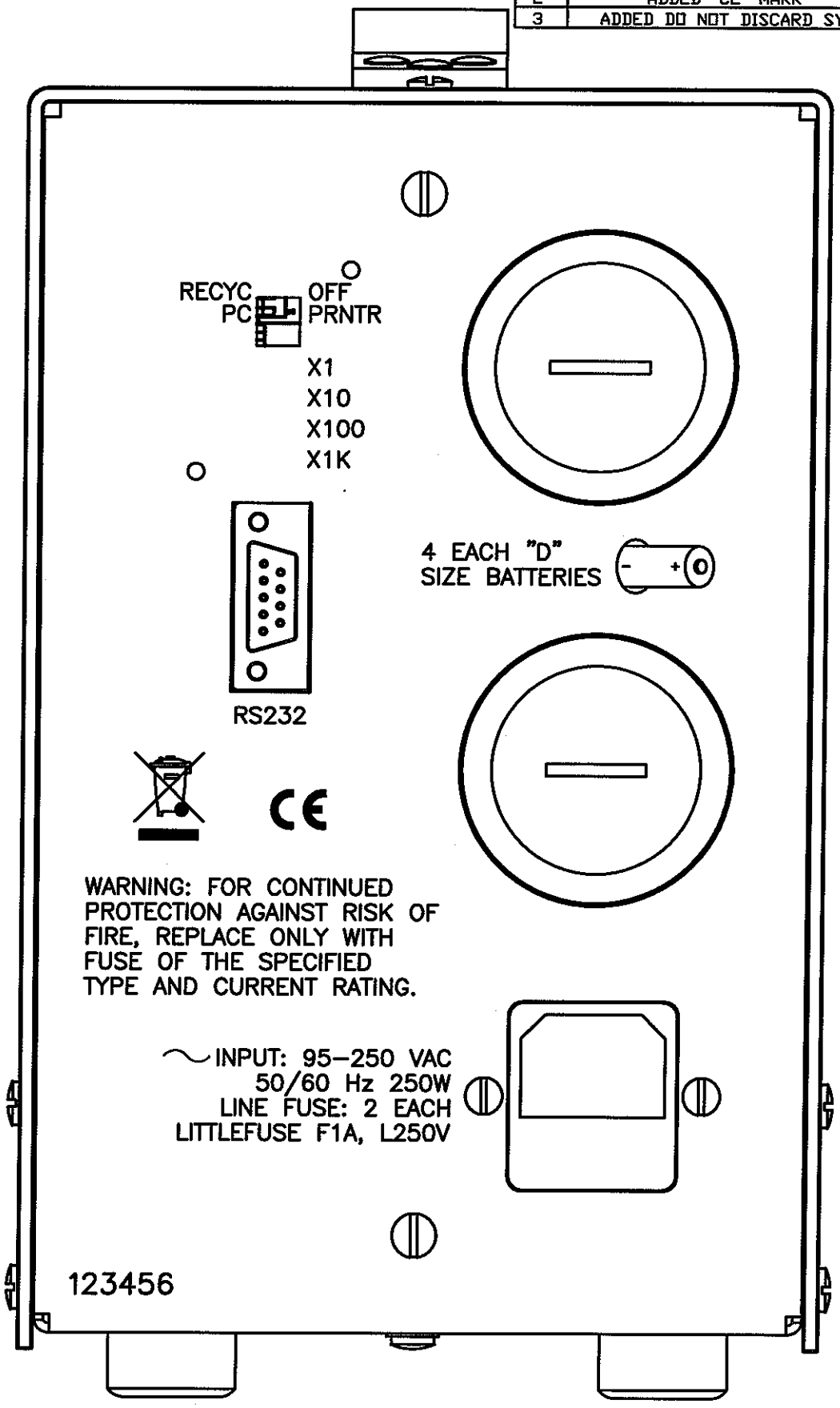

DWN	DATE	CHECKED	APPROVED
CMC	4/2/05		(GW) 4-10-06

TITLE: M 2000 REAR PANEL

LUDLUM MEASUREMENTS, INC.
501 OAK STREET
SWEETWATER, TEXAS 79556

SERIES 167

SHEET 409

Table of Contents

Introduction *1*

Getting Started *2*

Power 2-1

Operational Check 2-1

THR (Threshold) Setting 2-1

Operating Point 2-2

Determining Instrument Plateau 2-2

Specifications *3*

Description of Controls and Functions *4*

Front Panel 4-1

Back Panel 4-2

Internal Controls 4-2

Safety Considerations *5*

Environmental Conditions for Normal Use 5-1

Cleaning Instructions and Precautions 5-1

Warning Markings and Symbols 5-2

Replacement of Main Fuse(Back Panel) 5-3

Data Output *6*

Software 6-1

- Prior to Installation of Software 6-1
- Installation of Software 6-1
- Button Functions 6-2
- RS-232 Commands 6-3

Software License Agreement 6-4

Recycling *7*

Parts List *8*

Model 2000 Scaler 8-1

Main Board, Drawing 167 × 395 8-1
Push-wheel Board, Drawing 167 × 264 8-4
Display Board, Drawing 167 × 276 8-4
Wiring Diagram, Drawing 167 × 433 8-4

Drawings and Diagrams *9*

Section

1

Introduction

The Ludlum Model 2000 Scaler is a self-contained counting instrument designed for operation with scintillation, proportional, or GM (Geiger-Mueller) detectors. Counting is displayed as a scaler count on an LED (light-emitting diode) display. The instrument may be powered by 95-250 VAC, 50-60 Hz or by four "D" cell batteries. The unit is complete with a voltage-sensitive preamplifier, linear amplifier, electronic timer, and detector high-voltage power supply.

An RS-232 serial port is provided for attachment to a computer or optional printer. Computer interface cable and software are provided to start, stop, and record counts.

Section

2

Getting Started

Power

Select either line (LINE) or battery (BAT) operation with the power switch.

LINE operation: Connect the instrument to line power of 95–250 Vac, 50 60 Hz using the power cord supplied with the instrument. Turn the power switch to LINE and proceed to use the instrument.

BATTERY operation: The battery lids are located at the rear of the instrument. Use a coin or screwdriver to open the lids. Place four "D" cell batteries in the instrument with the terminal "buttons" (positive ends) facing out. Turn the power switch to the BAT position. Check the battery condition by pushing the HV BAT selector to BAT. (A downscale reading indicates battery reversal.) Adequate power is assured when the meter needle is above the BAT OK mark.

Operational Check

Determine if the instrument is operational by pressing the COUNT button. The count lamp should illuminate. (This action starts the scaler count.)

THR (Threshold) Setting

The instrument THR control is designed so that 1.00 on the threshold dial is approximately equal to a 10 mV (millivolt) input sensitivity.

Set THR for appropriate detector.

For scintillation detectors: Set THR on 1.00 (approximate 10 mV input threshold).

For GM detectors: Set THR at 3.5 (approximate 35 mV input threshold).

For proportional detectors: Set THR on 0.20 (approximate 2 mV input threshold).

Operating Point

The instrument and detector operating point is established by setting the probe voltage (HV) and instrument sensitivity (THR). Efficiency, background and noise for a given detector system are fixed by the physical makeup of the detector and rarely vary from unit to unit. However, the selection of the operating point makes a marked difference in the apparent contribution of these three sources of count.

In the singular case of the GM detector, a minimum operating voltage is required to establish the GM operating region. (At lower voltages, the detector operates as a very insensitive proportional counter.) This detector is not capable of energy discrimination (pulse height discrimination).

For gain sensitive detectors (proportional or scintillation), the most straightforward method of selecting the operating point is to develop a graph, relating count rate to system gain. This relationship is commonly referred to as a plateau or instrument plateau curve. System gain may be changed by adjusting detector high voltage (HV).

Determining Instrument Plateau

Set the time multiplier toggle switch to ×0.1 and the MINUTES thumbwheel switch to "001." This gives a 0.1 min (6 second) count.

Set the THR control to 1.0 for a scintillation detector or to 0.2 for a proportional detector.

With the detector shielded from the source, adjust the high-voltage control by 50 V increments, and take a plot of HV-versus-background count rate until the detector voltage rating is reached. Return the HV control to zero.

Expose detector to source and make another count-versus-voltage plot.

Plot both sets of data and select the operating point to correspond with the maximum source count and minimum background count. Avoid areas of very fast count rate changes with small changes in detector voltage. The optimum operating point for low background detectors is just above the inflection point (or break-over point) of the plateau curve. If the background count is irrelevant, shift the operating point to the plateau center for greater stability.

Section

3

Specifications

Power: line or battery power

Line Power: 95–250 Vac, 50-60 Hz single phase, 250W

Batteries: four "D" cells with typical life of 120 hours; self contained in the instrument

Input Sensitivity: voltage sensitive for use with all types of detectors, including air proportional, GM, and scintillation

High Voltage: adjustable with a ten-turn control from 200 to 2500 V; supports 60 megohm scintillation loads to 1500 V

Input Connector: series "C" coaxial connector; other connectors are available upon request

Scaler: a six-digit, light emitting diode, LED readout

Time: Time base is normally in minutes from 0-999 with multiples of ×0.1 and ×1.

Optional: Instrument may be switched to a *seconds* time base by placing the internal dipswitch (SW1), switch "2," to the ON position. In this case, the count time may be set from 0-999 *seconds* with a multiplier switch of ×1 and ×10.

Timer Accuracy: Time base for the scaler is crystal controlled and has a timer accuracy of ±0.2% of the thumb-switch setting.

Meter: 1 mA, 6.4 cm (2.5 in.) scale, self shielded DC mechanism, displaying 0 to 2.5 kV

Scaler Accuracy: within 2% of reference value

Size: 21.6 x 12.7 x 23.5 cm (8.5 x 5 x 9.3 in.) (H x W x L)

Weight: 3.1 kg (6.9 lb)

Finish: beige powder coat with sub-surface printed front panel

Section

4

Description of Controls and Functions

Front Panel

Count Lamp: a red LED, indicating that the scaler is in the count cycle

COUNT switch: resets and starts the scaler counting. The scaler turns off at the end of the preset time.

Count time: Time base is normally in minutes from 0 to 999 with multiples of ×0.1 and ×1. It may be changed to seconds by an internal dipswitch.

MINUTES: a three-decade, thumb-wheel switch used for presetting count time

Function Selector Switch: a two-position switch labeled HV and BAT. The function of this switch is to allow the operator to have HV readout or battery check status on the meter. The BAT position is momentary; the switch springs back to the HV position when released.

THR: a ten-turn control used to set the basic pulse discrimination point of the scaler. This control is linear in the range of 1.00 through 10.00.

Detector Input Connection: a series "C" coaxial connector; other connectors are available upon request

Power Switch: a three-position toggle switch. OFF indicates that power is off. LINE powers the instrument from line power of 95-250 VAC, 50-60 Hz. BAT provides power from the 4 "D" cell batteries.

HV: a ten-turn control for adjusting the HV from 200 to 2500 V, providing a linear adjustment of the detector voltage supply. Changing the detector voltage will cause the detector gain to change. A linear change in voltage will cause an exponential change in detector gain. The instrument will support 60 megohm scintillation loads to 1500 V.

Count Readout: a six-decade LED with a readout indicating the count

Back Panel

RS-232 connector: a 9 pin "D" connector, allowing output to a computer or optional printer

RS-232 Data Dipswitch: two-pole dipswitch located on the rear chassis underneath the calibration cover; controls the RS-232 data

The top switch (PC/PRNTR) controls the type of data. In PC mode, data is bi-directional, allowing the computer to start/stop counting. If the dipswitch is set to PC, and the push-wheels are all set to zero, the instrument count time can be changed by the computer through the RS-232 port. In the PRNTR mode, the scaler count is output only at the end of each count. If the dipswitch is set to PRNTR, setting the push-wheels to "000" sets the count time to infinity, allowing for very long count times.

The bottom dipswitch (RECYCLE OFF) allows counting to recycle instead of requiring a manual count for each cycle.

Input Power: a receptacle for 95-250 Vac, 50-60 Hz line cord

Battery compartment: holds four "D" cell batteries

Internal Controls

Time-base Dipswitch: two-pole dipswitch located on the main circuit board. This switch allows for selection of a *seconds* time base, variable from 0 to 999 seconds, with a multiplier switch of ×1 and ×10. Setting all push-wheels to zero allows the instrument count time to be set by an external computer through the RS-232 port if the RS-232 back-panel dipswitch is set to PC. If the RS-232 dipswitch is set to PRNTR, setting the push-wheels to "000" sets the count time to infinity, allowing for very long count times.

Section

5

Safety Considerations

Environmental Conditions for Normal Use

Indoor use only

No maximum altitude

Temperature range of –20°C to 50°C (–4°F to 122°F)

Maximum relative humidity of less than 95% (non-condensing)

Mains supply voltage range of 95-250 VAC, 50/60Hz single phase, 250W

Maximum transient voltage of 1500 VAC

Installation Category II (Over-voltage Category defined by IEC 1010-1)

Pollution Degree 1 (as defined by IEC 664)

Cleaning Instructions and Precautions

The Model 2000 may be cleaned externally with a damp cloth, using only water as the wetting agent. Do not immerse the instrument in any liquid. Observe the following precautions when cleaning:

1. Turn the instrument OFF and disconnect the instrument power cord.

2. Allow the instrument to sit for one minute before cleaning.

Warning Markings and Symbols

Caution!

The operator or responsible party is cautioned that the protection provided by the equipment may be impaired if the equipment is used in a manner not specified by Ludlum Measurements, Inc.

The Model 2000 Scaler is marked with the following symbols:

ALTERNATING CURRENT (AC) (IEC 417, No. 5032) - designates an input receptacle that accommodates a power cord intended for connection to AC voltages. This symbol appears on the back panel.

PROTECTIVE CONDUCTOR TERMINAL (per IEC 417, No. 5019) - designates the central grounding point for the safety ground. This symbol is visible inside the chassis.

CAUTION (per ISO 3864, No. B.3.1) – designates hazardous live voltage and risk of electric shock. During normal use, internal components are hazardous live. This instrument must be isolated or disconnected from the hazardous live voltage before accessing the internal components. This symbol appears on the front panel. **Note the following precautions:**

Warning!

The operator is strongly cautioned to take the following precautions to avoid contact with internal hazardous live parts that are accessible using a tool:

1. Turn the instrument power OFF and disconnect the power cord.
2. Allow the instrument to sit for one minute before accessing internal components.

CAUTION, RISK OF ELECTRIC SHOCK (per ISO 3864, No. B.3.6) – designates a terminal (connector) that allows connection to a voltage exceeding 1 kV. Contact with the subject connector while the instrument is on or shortly after turning off may result in electric shock. This symbol appears on the front panel.

The "CE" mark is used to identify this instrument as being acceptable for use within the European Union. It is located on the rear panel.

The "**crossed-out wheelie bin**" symbol notifies the consumer that the product is not to be mixed with unsorted municipal waste when discarding; each material must be separated. The symbol is placed near the AC receptacle. See section 7, "Recycling," for further information.

Replacement of Main Fuse (Back Panel)

Warning!

For continued protection against risk of fire, replace only with fuse of the specified type and current rating!

Section

6

Data Output

The Ludlum Model 2000 RS-232 serial port can be connected to a computer or printer for data logging of the scaler count information. Windows™-based software and cable are supplied with the instrument. The computer software can control the count time, start and stop counting, time/data stamp data, and print or save data. An optional printer may also be purchased to print each scaler reading.

The two-pole dipswitch on the rear chassis underneath the calibration cover controls the RS-232 data. The bottom switch (PC/PRNTR) controls the type of data. In PC mode, data is bi-directional, allowing the computer to start/stop counting. In the PC mode, the count time can also be changed by the computer, but only if the count time push-wheels are set to "000". In the PRNTR mode, the scaler count is output at the end of each count only. The top switch (RECYC/OFF) allows counting to recycle instead of requiring a manual push of the COUNT button for each cycle. This mode is useful with the optional printer for taking many separate counts.

Software

PRIOR TO INSTALLATION OF SOFTWARE

Ensure that both the computer and the Model 2000 are turned OFF.

Connect one end of the supplied RS-232 cable to the Model 2000 and connect the other end of the cable to any unused serial port on the back of the computer. (This unused port should be labeled COM1, COM2, COM3, or COM4.)

INSTALLATION OF SOFTWARE

1. Insert LMI Model 2200/2000 Software CD into the CDROM drive. Setup will automatically start. If it does not, double-click on the "setup.exe" file located on the CD.

2. The program will be installed to:
   C:\Program Files\m2200/2000.

   An icon in the start menu is created under:
   Start/Programs/Ludlum Measurements, Inc. /Model 2200/2000.

3. Prior to running the program, ensure that the Model 2000 is in the PC mode and the count time push-wheels are set to"000."

BUTTON FUNCTIONS

Start/Stop Count: Click on this button to start a count. Clicking on it again will hold the count. The Model 2000 automatically sends the final count to the computer when the count time expires.

Read Count: Click on this button to read the current count as displayed on the Model 2000 display.

Set Count Time: Click on this button to set the count time. The count time push-wheels must be set to "000" for this to work.

Read Count Time Left: Click on this button to read the remaining count time left during a timed count. If a count is not in progress, this returns "0"

Start Logging/Stop Logging: Click on this button to start taking a series of timed counts. The number of counts taken can be adjusted to continuous, 10 counts, 100 counts, 200 counts, or a user-defined value.

After the logging has been stopped, the data may be saved to a comma-delimited file or printed to a printer. A temporary file called "grid.dat" is created when logging is started. The format for the file is a comma-delimited text file.

If the program is closed before the Save or Print button is used, the data can be retrieved from this file.

Save: Click on this button to save the logged data to a comma-delimited file for import into a spreadsheet or database program.

Print: Click on this button to print the logged data to a printer.

RS-232 COMMANDS

The Model 2000 communicates by way of an RS-232 interface. The RS-232 port operates at: 2400 baud, 8 data bits, 1 stop bit, no parity, and hardware (RTS/CTS) flow control.

A standard RS-232 cable with straight-through connections is required.

Pin-outs of RS-232 Connector/Cable:

Model 2000		PC (9-Pin)	
2	TXD	RXD	2
3	RXD	TXD	3
5	GND	GND	5
7	CTS	RTS	7
8	RTS	CTS	8

All RS-232 commands must be in UPPERCASE and terminated with either a carriage return [13] + linefeed [10] or just a linefeed [10] character. The instrument uses the linefeed character to determine when a valid command has been received. The commands are as follows:

SS
Start/Stop a scaler count.

SO
Start/Stop a scaler count. When the count completes, the scaler reading is automatically sent to the computer.

RS
Read the scaler count

RL
Read the count time left.

RM
Read count time base; returns "0" for minutes and "1" for seconds.

SC
Set count time. Count time is adjustable from 1 to 65535. The count time pushwheels must be set to "000" for this count time to be active.

RC
Read the current count time. If the count time pushwheels are set to "000", the PC count time is returned.

Software License Agreement

Rev. (number) 1.0
Written by (or Revised by): Richard Sroka **Date:** 20 Jan 06
Approved by: Ed Ems **Date:** 20 JAN 06

BY INSTALLING THIS SOFTWARE, YOU ARE CONSENTING TO BE BOUND BY THIS AGREEMENT. IF YOU DO NOT AGREE TO ALL OF THE TERMS OF THIS AGREEMENT, DO NOT INSTALL THE PRODUCT.

Single User License Grant: Ludlum Measurements, Inc. ("Ludlum") and its suppliers grant to Customer ("Customer") a nonexclusive and nontransferable license to use the Ludlum software ("Software") in object code form solely on a single central processing unit owned or leased by Customer or otherwise embedded in equipment provided by Ludlum.

Customer may make one (1) archival copy of the Software provided Customer affixes to such copy all copyright, confidentiality, and proprietary notices that appear on the original.

EXCEPT AS EXPRESSLY AUTHORIZED ABOVE, CUSTOMER SHALL NOT: COPY, IN WHOLE OR IN PART, SOFTWARE OR DOCUMENTATION; MODIFY THE SOFTWARE; REVERSE COMPILE OR REVERSE ASSEMBLE ALL OR ANY PORTION OF THE SOFTWARE; OR RENT, LEASE, DISTRIBUTE, SELL, OR CREATE DERIVATIVE WORKS OF THE SOFTWARE.

Customer agrees that aspects of the licensed materials, including the specific design and structure of individual programs, constitute trade secrets and/or copyrighted material of Ludlum. Customer agrees not to disclose, provide, or otherwise make available such trade secrets or copyrighted material in any form to any third party without the prior written consent of Ludlum. Customer agrees to implement reasonable security measures to protect such trade secrets and copyrighted material. Title to Software and documentation shall remain solely with Ludlum.

LIMITED WARRANTY. Ludlum warrants that for a period of ninety (90) days from the date of shipment from Ludlum: (i) the media on which the Software is furnished will be

free of defects in materials and workmanship under normal use; and (ii) the Software substantially conforms to its published specifications. Except for the foregoing, the Software is provided AS IS. This limited warranty extends only to Customer as the original licensee. Customer's exclusive remedy and the entire liability of Ludlum and its suppliers under this limited warranty will be, at Ludlum or its service center's option, repair, replacement, or refund of the Software if reported (or, upon request, returned) to the party supplying the Software to Customer. In no event does Ludlum warrant that the Software is error free or that Customer will be able to operate the Software without problems or interruptions.

This warranty does not apply if the software (a) has been altered, except by Ludlum, (b) has not been installed, operated, repaired, or maintained in accordance with instructions supplied by Ludlum, (c) has been subjected to abnormal physical or electrical stress, misuse, negligence, or accident, or (d) is used in ultrahazardous activities.

DISCLAIMER. EXCEPT AS SPECIFIED IN THIS WARRANTY, ALL EXPRESS OR IMPLIED CONDITIONS, REPRESENTATIONS, AND WARRANTIES INCLUDING, WITHOUT LIMITATION, ANY IMPLIED WARRANTY OF MERCHANTABILITY, FITNESS FOR A PARTICULAR PURPOSE, NONINFRINGEMENT OR ARISING FROM A COURSE OF DEALING, USAGE, OR TRADE PRACTICE, ARE HEREBY EXCLUDED TO THE EXTENT ALLOWED BY APPLICABLE LAW.

IN NO EVENT WILL LUDLUM OR ITS SUPPLIERS BE LIABLE FOR ANY LOST REVENUE, PROFIT, OR DATA, OR FOR SPECIAL, INDIRECT, CONSEQUENTIAL, INCIDENTAL, OR PUNITIVE DAMAGES HOWEVER CAUSED AND REGARDLESS OF THE THEORY OF LIABILITY ARISING OUT OF THE USE OF OR INABILITY TO USE THE SOFTWARE EVEN IF LUDLUM OR ITS SUPPLIERS HAVE BEEN ADVISED OF THE POSSIBILITY OF SUCH DAMAGES. In no event shall Ludlum's or its suppliers' liability to Customer, whether in contract, tort (including negligence), or otherwise, exceed the price paid by Customer. The foregoing limitations shall apply even if the above-stated warranty fails of its essential purpose. SOME STATES DO NOT ALLOW LIMITATION OR EXCLUSION OF LIABILITY FOR CONSEQUENTIAL OR INCIDENTAL DAMAGES.

The above warranty DOES NOT apply to any beta software, any software made available for testing or demonstration purposes, any temporary software modules or any software for which Ludlum does not receive a license fee. All such software products are provided AS IS without any warranty whatsoever.

This License is effective until terminated. Customer may terminate this License at any time by destroying all copies of Software including any documentation. This License will terminate immediately without notice from Ludlum if Customer fails to comply with any provision of this License. Upon termination, Customer must destroy all copies of Software.

Software, including technical data, is subject to U.S. export control laws, including the U.S. Export Administration Act and its associated regulations, and may be subject to export or import regulations in other countries. Customer agrees to comply strictly with

all such regulations and acknowledges that it has the responsibility to obtain licenses to export, re-export, or import Software.

This License shall be governed by and construed in accordance with the laws of the State of Texas, United States of America, as if performed wholly within the state and without giving effect to the principles of conflict of law. If any portion hereof is found to be void or unenforceable, the remaining provisions of this License shall remain in full force and effect. This License constitutes the entire License between the parties with respect to the use of the Software.

Restricted Rights - Ludlum's software is provided to non-DOD agencies with RESTRICTED RIGHTS and its supporting documentation is provided with LIMITED RIGHTS. Use, duplication, or disclosure by the Government is subject to the restrictions as set forth in subparagraph "C" of the Commercial Computer Software - Restricted Rights clause at FAR 52.227-19. In the event the sale is to a DOD agency, the government's rights in software, supporting documentation, and technical data are governed by the restrictions in the Technical Data Commercial Items clause at DFARS 252.227-7015 and DFARS 227.7202. Manufacturer is Ludlum Measurements, Inc. 501 Oak Street Sweetwater, Texas 79556.

Section

7

Recycling

Ludlum Measurements, Inc. supports the recycling of the electronics products it produces for the purpose of protecting the environment and to comply with all regional, national, and international agencies that promote economically and environmentally sustainable recycling systems. To this end, Ludlum Measurements, Inc. strives to supply the consumer of its goods with information regarding reuse and recycling of the many different types of materials used in its products. With many different agencies – public and private – involved in this pursuit, it becomes evident that a myriad of methods can be used in the process of recycling. Therefore, Ludlum Measurements, Inc. does not suggest one particular method over another, but simply desires to inform its consumers of the range of recyclable materials present in its products, so that the user will have flexibility in following all local and federal laws.

The following types of recyclable materials are present in Ludlum Measurements, Inc. electronics products, and should be recycled separately. The list is not all-inclusive, nor does it suggest that all materials are present in each piece of equipment:

Batteries	Glass	Aluminum and Stainless Steel
Circuit Boards	Plastics	Liquid Crystal Display (LCD)

Ludlum Measurements, Inc. products that have been placed on the market after August 13, 2005, have been labeled with a symbol recognized internationally as the "crossed-out wheelie bin." This notifies the consumer that the product is not to be mixed with unsorted municipal waste when discarding; each material must be separated. The symbol will be placed near the AC receptacle, except for portable equipment where it will be placed on the battery lid.

The symbol appears as such:

Section 8

Parts List

	Reference	Description	Part Number
Model 2000 Scaler	UNIT	Completely Assembled Model 2000 Scaler	48-1648
Main Board, Drawing 167 × 395	BOARD	Completely Assembled Main Circuit Board	5167-383
CRYSTAL	Y1	MICRO 6.144 MHZ	01-5262
CAPACITORS	C1	100 pF, 100V	04-5661
	C2	0.01uF, 50V	04-5664
	C3	100 pF, 100V	04-5661
	C4	0.1uF, 50V	04-5663
	C5	0.001uF, 100V	04- 5659
	C6-C7	0.01uF, 500V	04-5696
	C8	0.1uF, 16V	04-5730
	C9	68uF, 10V	04-5654
	C10-C11	0.02uF, 3KV	04-5704
	C12-C18	0.01uF, 500V	04-5696
	C19	10uF, 25V	04-5728
	C20	0.01uF, 500V	04-5696
	C22	0.001uF, 100V	04-5659
	C23-C26	0.1uF, 50V	04-5663
	C27	0.001uF, 3KV	04-5727
	C28	47pF, 100V	04-5660
	C32	100uF, 20V	04-5583
	C33	1uF, 16V	04-5701
	C34	68uF, 10V	04-5654
	C36	47pF, 100V	04-5660
	C39-C40	27 pF, 100V	04-5658
	C41-C44	1uF, 16V	04-5701
	C45	47uF, 10V	04-5666

	Reference	Description	Part Number
	C46-C47	10uF, 25V	04-5728
	C48-C57	0.01uF, 500V	04-5696
	C61-C62	22uF, 20V	04-5672
	C64-C65	0.1uF, 50V	04-5663
	C66-C67	10uF, 25V	04-5728
	C68	47uF, 10V	04-5666
	C69	1uF, 16V	04-5701
TRANSISTORS	Q1	MMBT3904LT1	05-5841
	Q2	REG-LT1460KCS3	05-5867
	Q3	MMBT3904LT1	05-5841
	Q4	MAX810LEUR	06-6424
INTEGRATED CIRCUITS	U1	LM358D	06-6312
	U2	CD74HC4538M	06-6297
	U3	TLC372ID	06-6290
	U4	LT1304CS8-5	06-6434
	U7	CMXT3906	05-5890
	U8	N87C51FC1	06-6303
	U9	MAX232D	06-6382
	U10	LT1304CS8	06-6394
	U11	CMXT3904	05-5888
DIODES	CR1-CR5	CMPD2004S	07-6402
	CR6-CR10	CMSH1-40M	07-6411
	CR11-CR17	CMPD2004S	07-6402
	CR18	CMSH1-40M	07-6411
	CR19	CMPD2004S	07-6402
SWITCHES	SW1	DIP-2 POS	08-6712
	SW2	A6ER-2101RA	08-6782
POTENTIOMETERS	R26	5K, HVM CAL	09-6918
	R28	100K, HV CAL	09-6930
RESISTORS	R1-R2	500 MEG, 3KV, 2%	12-7031
	R3	365K, 1/8W, 1%	12-7049
	R4-R5	100K, 1/8W, 1%	12-7834
	R6	1MEG, 1/8W, 1%	12-7844
	R7	22.1K, 1/8W, 1%	12-7843
	R8-R9	100K, 1/8W, 1%	12-7834
	R10	200K, 1/8W, 1%	12-7992

	Reference	Description	Part Number
	R11	200 OHM, 1/8W, 1%	12-7846
	R12-R19	1K, 1/8W, 1%	12-7832
	R20	10K, 1/8W, 1%	12-7839
	R21	2.21K, 1/8W, 1%	12-7835
	R22	100K, 1/8W, 1%	12-7834
	R23	33.2K, 1/8W, 1%	12-7842
	R24	10 OHM, 1W	12-7526
	R25	100 OHM, 1/4W, 1%	12-7904
	R27	1MEG, 1/8W, 1%	12-7844
	R29	10K, 1/8W, 1%	12-7839
	R31-R32	10K, 1/8W, 1%	12-7839
	R33	22.1K, 1/8W, 1%	12-7843
	R34	10K, 1/8W, 1%	12-7839
	R35-R36	100K, 1/8W, 1%	12-7834
	R38-R39	100K, 1/8W, 1%	12-7834
	R40	200K, 1/8W, 1%	12-7992
	R41	33.2K, 1/8W, 1%	12-7842
	R42	22.1K, 1/8W, 1%	12-7843
	R43	8.25K, 1/8W, 1%	12-7838
	R45-R46	22.1K, 1/8W, 1%	12-7843
	R47	4.75K, 1/8W, 1%	12-7858
	R50-R51	4.75 OHM, 1/8W, 1%	12-7980
	R52	4.75K, 1/8W, 1%	12-7858
	R53	200 OHM, 1/8W, 1%	12-7846
	R54-R55	1K, 1/8W, 1%	12-7832
INDUCTORS	L1-L2	22uH	21-9808
	L3	220uH	21-9678
TRANSFORMERS	T1	4275-156	21-9925
CONNECTORS	P1	640456-4 MTA100×4	13-8088
	P3-P4	640456-3 MTA100×3	13-8081
	P5	640456-6 MTA100×6	13-8095
	P6	1-640456-0 MTA100	13-8066
	P7	747020-2	13-8555
	P8	TEST JACK	18-8806
	P9	640456-6 MTA100×6	13-8095
	P10	640456-2 MTA 100×2	13-8073
	P11	CONTACT #1434	18-9124
	P12	640456-3 MTA100×3	13-8081
	P13	CONTACT #1434	18-9124

	Reference	Description	Part Number
Push-wheel Board, Drawing 167 × 264	BOARD	Completely Assembled Push-wheel Board	5167-333
CAPACITORS	C1-C3	0.001uF, 100V	04-5519
SWITCHES	SW1-SW3	PUSHWHEEL	4167-504
DIODE	*	1N4148	07-6272
CONNECTOR	P11	640456-8 MTA100	13-8039
Display Board, Drawing 167 × 276	BOARD	Assembled Display Board	5167-337
CAPACITORS	C1	47uF, 16V, C	04-5550
	C2-C5	0.001uF, 16V, C	04-5519
LED Displays	U1-U6	HDSP-E103	07-6342
	U7	MAX7219ENG	06-6443
DIODE	CR1	LED DISPLAY	07-6377
RESISTORS	R1-R4	22K, 1/4W, 5%	10-7070
	R5	47K, 1/3W, 5%	12-7758
SWITCH	SW1	SCHURTER, COUNTING	08-6783
CONNECTOR	P15	640456-6 MTA100	13-8095
Wiring Diagram, Drawing 167 × 433			
SWITCHES	SW1	MTF206P	08-6780
	SW2-SW3	7101-SYZ-QE	08-6658
POTENTIOMETERS	R3-R4	10K, 10-TURN POT	09-6761
CONNECTORS	P7	RS232	13-8607
	J1	640456-4 MTA100	13-8087
	J2	UG706/U "C" CONN.	4478-011
	J3	640456-3 MTA100	13-8081
	J4	640442-3 MTA100	13-8135

	Reference	Description	Part Number
	J5	640442-6 MTA100	13-8171
	J6	1-640442-0 MTA100	13-8136
	J9	640442-6 MTA100	13-8171
	J10	640456-2 MTA100	13-8073
	J11	640442-8 MTA100	13-8184
	J12	640442-3 MTA100	13-8135
	J13	COAX PIGTAIL	8167-432
	J15	640442-6 MTA100	13-8171
	J19	AC RECEPTACLE W/ CORCOM FILTER	21-9830
MISCELLANEOUS	*	M2200/2000 SOFTWARE	1370-049
	PS1	POWER SUPPLY	22-9321
	F1	3AG 1A FUSE	21-9704
	*	METER ASSY	4167-302
	M1	M2200 METER	15-8048
	B1-B4	BATTERY	21-9313
	2 EA.	BATTERY HOLDER	22-9400
	*	MAIN HARNESS	8167-411
	*	POWER HARNESS	8167-347
	*	READOUT HARNESS	8167-374
	4 EA.	BUMPER PAD-BLK	21-9302
	*	COVER-SCALER	18-8987
	*	HANDLE	21-9346
	*	CALIBRATION COVER	9167-380
	*	*Belden* POWER CORD	21-9394
	*	CABLE "C"	40-1004

Section

9

Drawings

Main Board, Drawing 167 × 395 (5 sheets)

Main Board Component Layout, Drawing 167 × 396

Push-wheel Board, Drawing 167 × 264

Push-wheel Board Component Layout, Drawing 167 × 265 (2 sheets)

Display Board, Drawing 167 × 276

Display Board Component Layout, Drawing 167 × 277 (2 sheets)

Wiring Diagram, Drawing 167 × 433

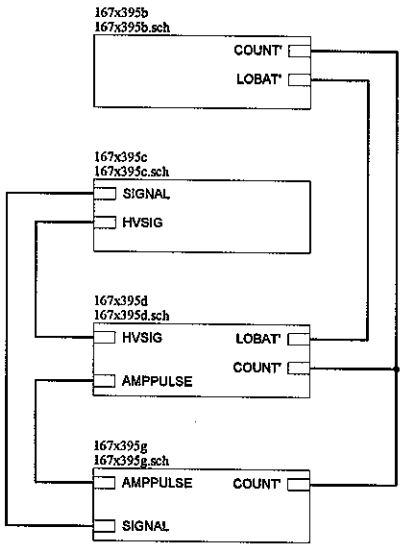

LUDLUM MEASUREMENTS, INC.			PO Box 810 501 Oak Street Sweetwater, Texas 79556 U.S.A. 1-800-622-0828
Drawn: JK	29-AUG-03	Title: MAIN BOARD	
Design: RSS	29-AUG-03	Model: M2000	
Check:		Board#: 5167-383	
Approve: RHZ	18 Sep 03	Sheet: 1 of 5	Series 167 / Sheet 395
11:34:18	18-Sep-2003	Rev: 5.0	
167x395a.sch			

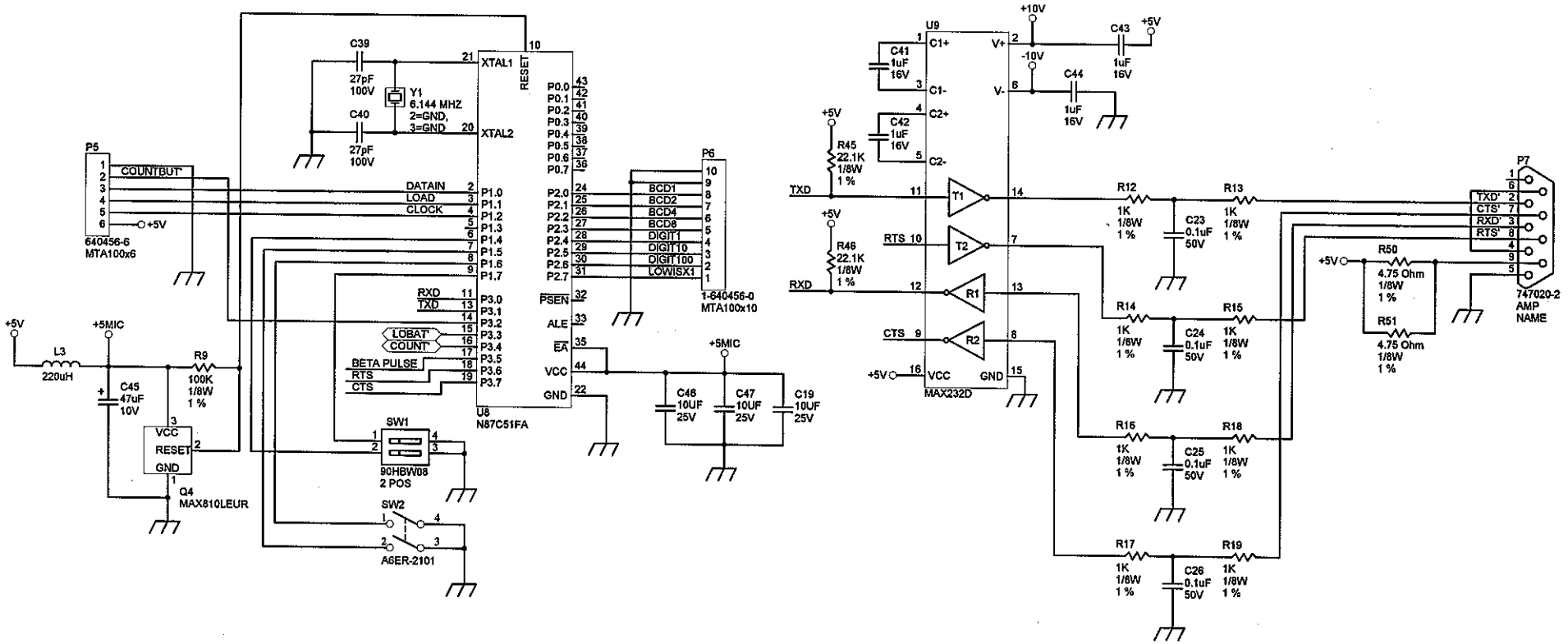

LUDLUM MEASUREMENTS, INC.
PO Box 810
501 Oak Street
Sweetwater, Texas 79556
U.S.A. 1-800-622-0828

Drawn: JK	29-AUG-03	Title: MAIN BOARD	
Design: RSS	29-AUG-03	Model: M2000	
Check:		Board#: 5167-383	
Approve: RSS 18 Sep 03		Sheet: 2 of 5	Series 167 / Sheet 395
11:34:19	18-Sep-2003	Rev: 5.0	
167x395b.sch			

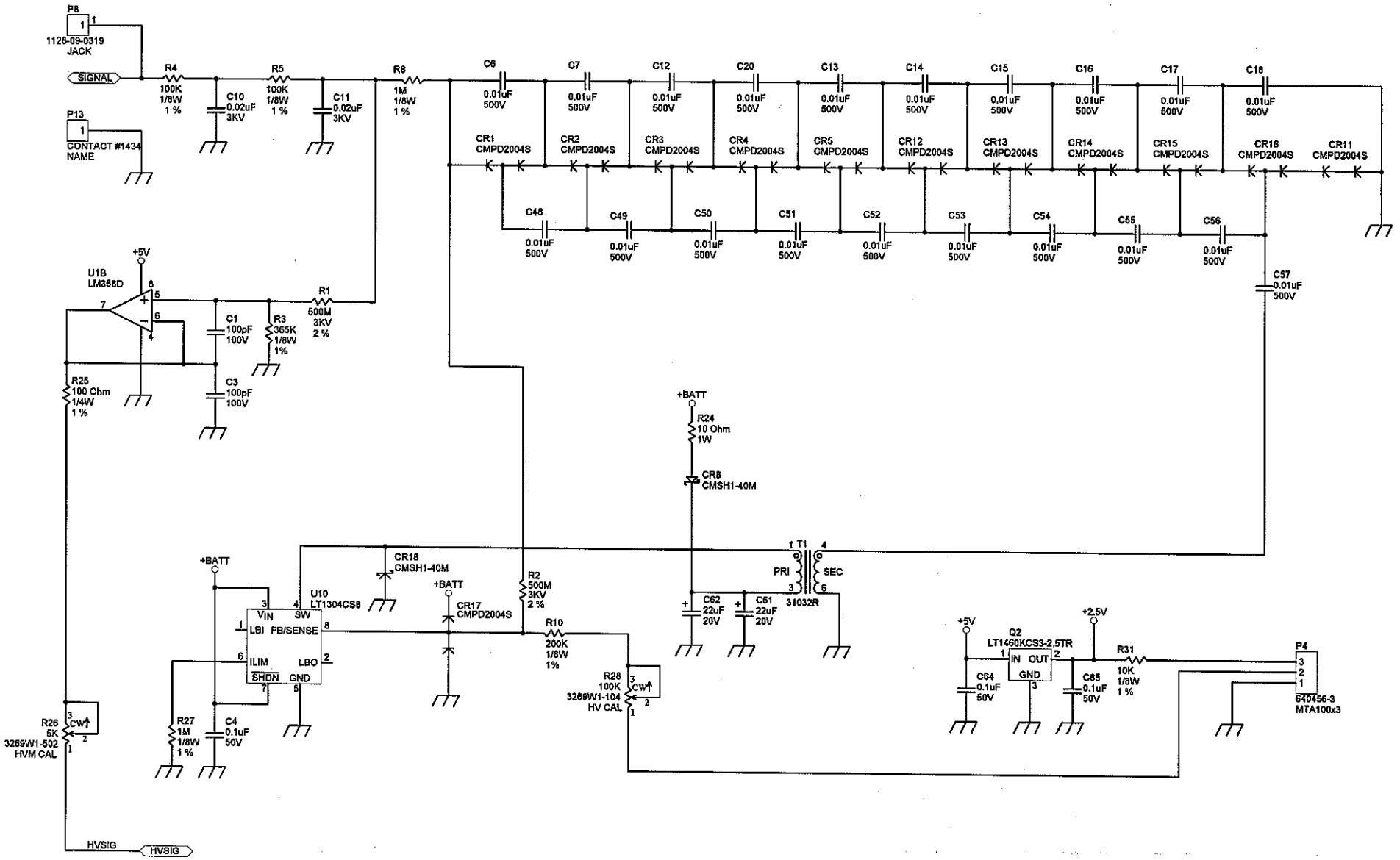

LUDLUM MEASUREMENTS, INC.		PO Box 810 501 Oak Street Sweetwater, Texas 79556 U.S.A. 1-800-622-0828	
Drawn: JK	29-AUG-03	Title: MAIN BOARD	
Design: RSS	29-AUG-03	Model: M2000	
Check:		Board#: 5167-383	
Approve:	18 Sept 03	Sheet: 3 of 5	Series 167 / Sheet 395
11:27:12	18-Sep-2003	Rev: 5.0	
167x395c.sch			

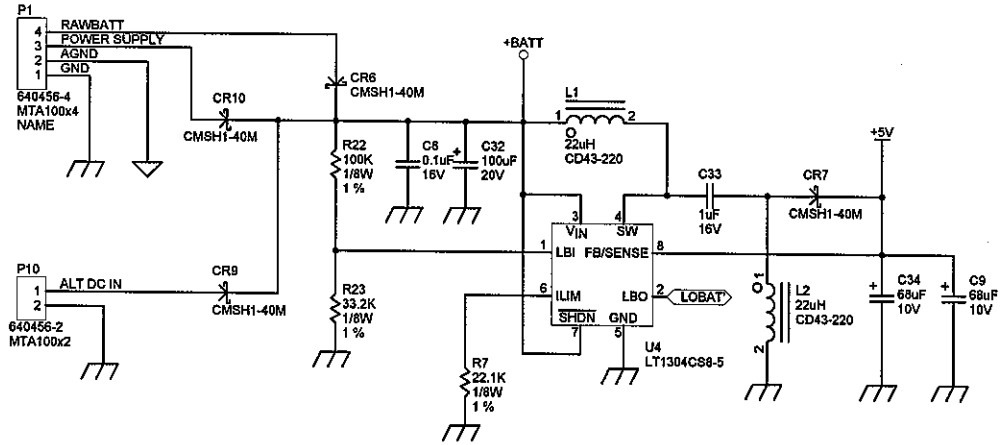

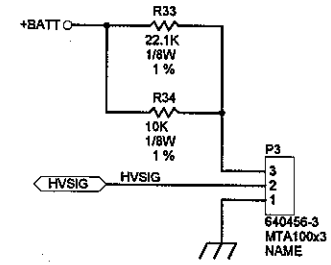

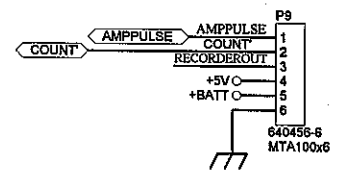

LUDLUM MEASUREMENTS, INC.		PO Box 810 501 Oak Street Sweetwater, Texas 79556 U.S.A. 1-800-622-0828	
Drawn: JK	29-AUG-03	Title: MAIN BOARD	
Design: RSS	29-AUG-03	Model: M2000	
Check:		Board#: 5167-383	
Approve: RSS	18 Sep 03	Sheet: 4 of 5	Series 167 / Sheet 395
11:34:20	18-Sep-2003	Rev: 5.0	
167x395d.sch			

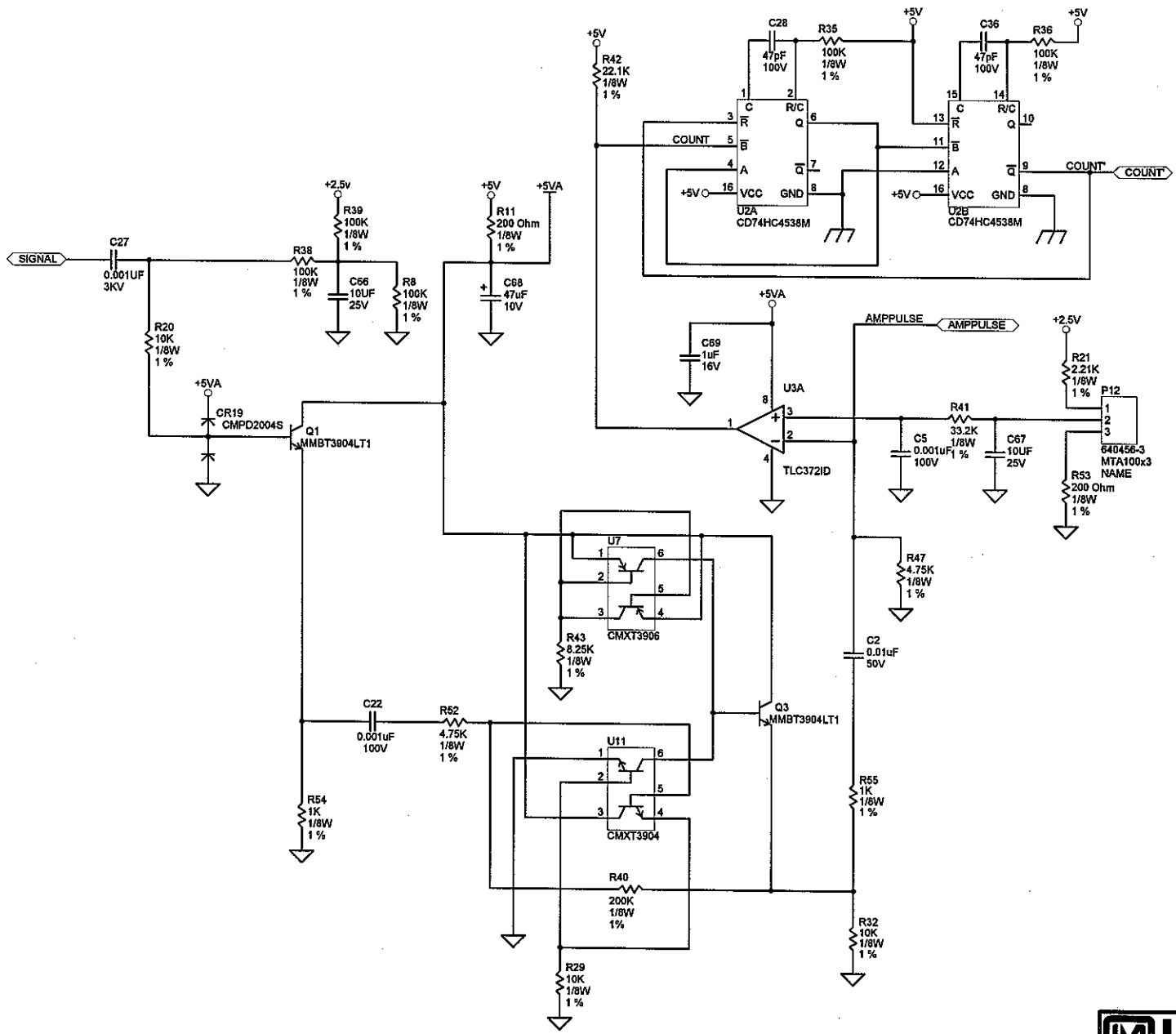

LUDLUM MEASUREMENTS, INC.		PO Box 810 501 Oak Street Sweetwater, Texas 79556 U.S.A. 1-800-622-0828	
Drawn: JK	29-AUG-03	Title: MAIN BOARD	
Design: RSS	29-AUG-03	Model: M2000	
Check:		Board#: 5167-383	
Approve:	18 Sep 03	Sheet: 5 of 5	Series 167 / Sheet 395
11:34:20	18-Sep-2003	Rev: 5.0	
167x395g.sch			

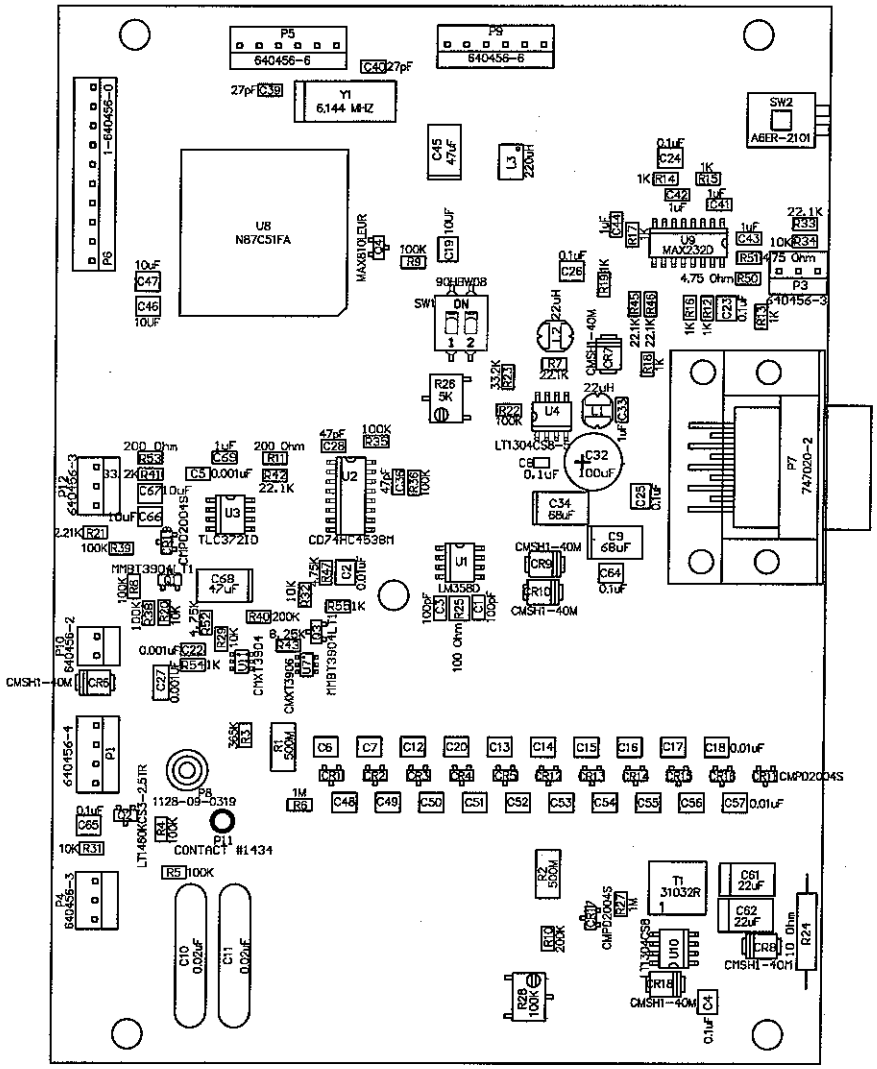

Drawn: JK	29-AUG-03	Title: MAIN BOARD	
Design: RSS	29-AUG-03		
Check:		Model: M2000	
Approve: RSS	18 Sep 03	Board#: 5167-383	
Layer:		Rev: 5.0	Series 167 / Sheet 396
MD: 11:33:33 18-Sep-2003		SCALE: 1.00	

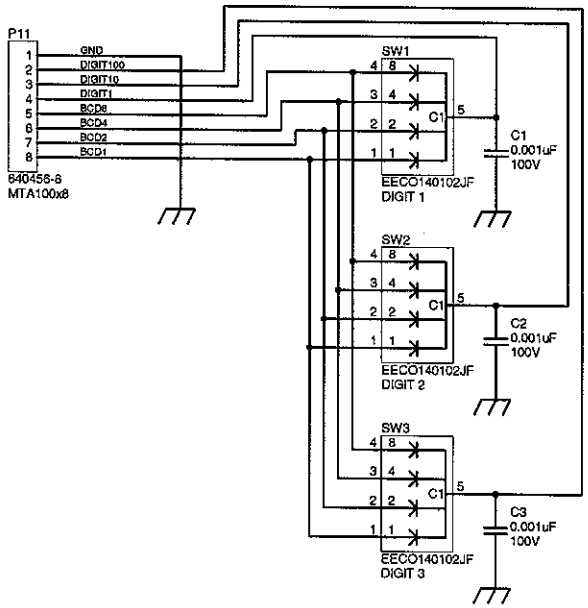

LUDLUM MEASUREMENTS, INC.		PO Box 810 501 Oak Street Sweetwater, Texas 79556 U.S.A. 1-800-622-0828	
Drawn: JK	02-JUNE-00	Title: PUSHWHEEL BOARD	
Design: RSS	30-MAY-00	Model: 2200	
Check: BS	6-28-01	Board#: 5167-333	
Approve: RG	6-28-01	Sheet: 1 of 1	Series 167 / Sheet 264
16:02:56	28-Jun-2001	Rev: 2.0	
X:\Projects\LMM2200\M2200.Ddb - Documents\5167-333\REV2.0\167x264A			

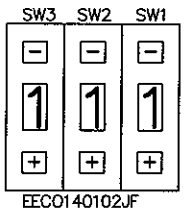

EEC0140102JF

Drawn:	JK	20-APR-01	Title: PUSHWHEEL BOARD		
Design:	RSS	20-APR-01			
Check:	RSS	6-28-01	Model: 2200		
Approve:	R.C.	6-28-01	Board#: 5167-333		
Layer: Mech.1 Mech.2 Mech.3 Mech.4	Top Overlay		Rev: 2.0	Series 167	Sheet 265
	MD:		SCALE: 1.00		
	16:03:21	28-Jun-2001			

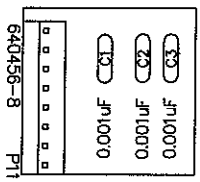

Drawn: JK	20-APR-01	Title: PUSHWHEEL BOARD	
Design: RSS	20-APR-01		
Check: RSS	6-28-01	Model: 2200	
Approve: R.C.	6-28-01	Board#: 5167-333	
Layer: Mech.1 Mech.2 Mech.3 Mech.4	Bottom Overlay	Rev: 2.0	Series 167 / Sheet 265
	MD:	SCALE: 1.00	
	16:03:21 28-Jun-2001		

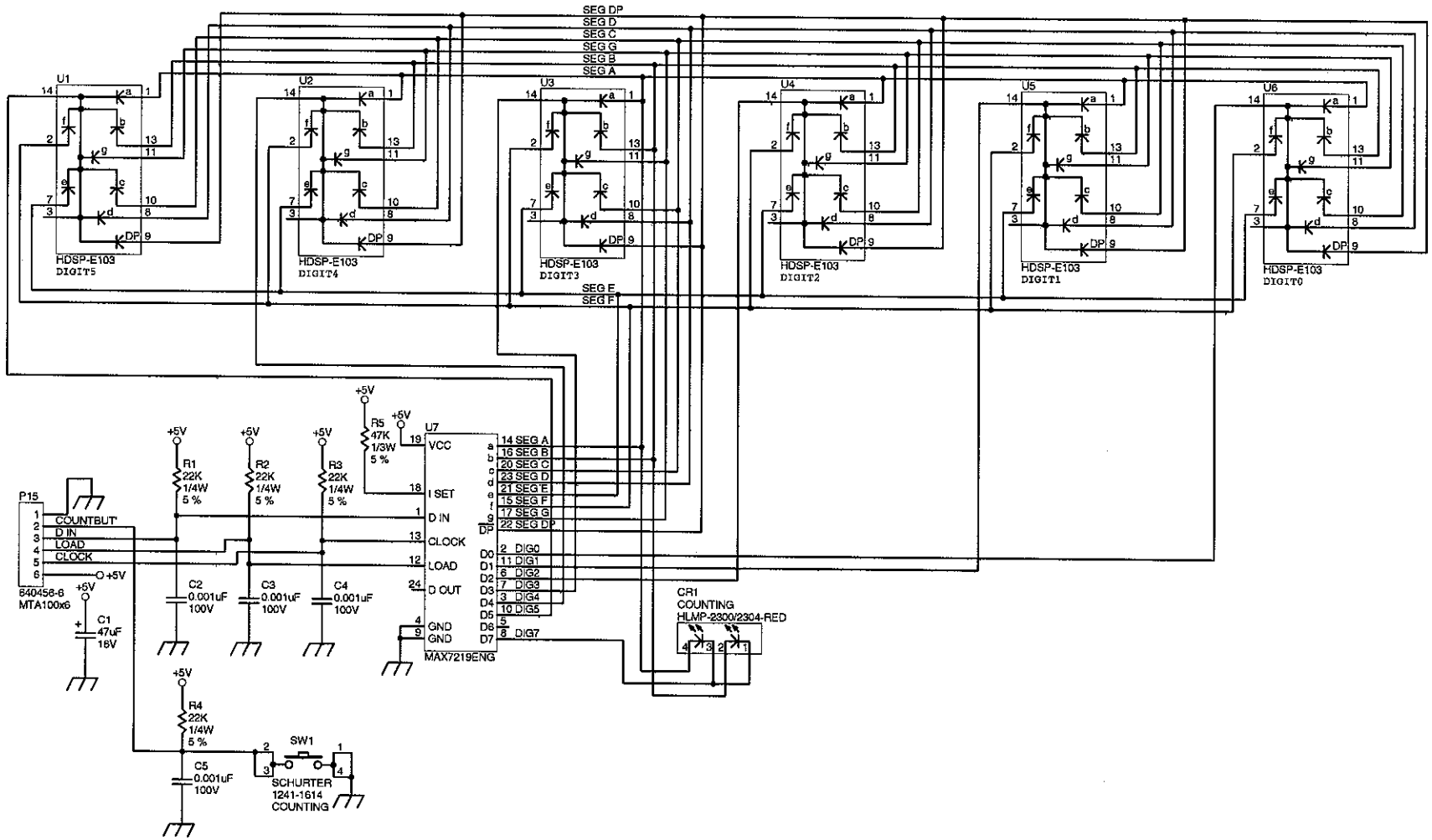

LUDLUM MEASUREMENTS, INC.	PO Box 810 501 Oak Street Sweetwater, Texas 79556 U.S.A. 1-800-622-0828	
Drawn: JK	05-JUN-00	Title: Display Board
Design: RSS	21-JAN-98	Model: 2200
Check: RC	6-28-01	Board#: 5167-337
Approve: RC	6-28-01	Sheet: 1 of 1
16:05:32	28-Jun-2001	Rev: 1.0
X:\Projects\LM\M2200\M2200.Dob - Documents\5167-337\REV2.0\167v276		Series 167 / Sheet 276

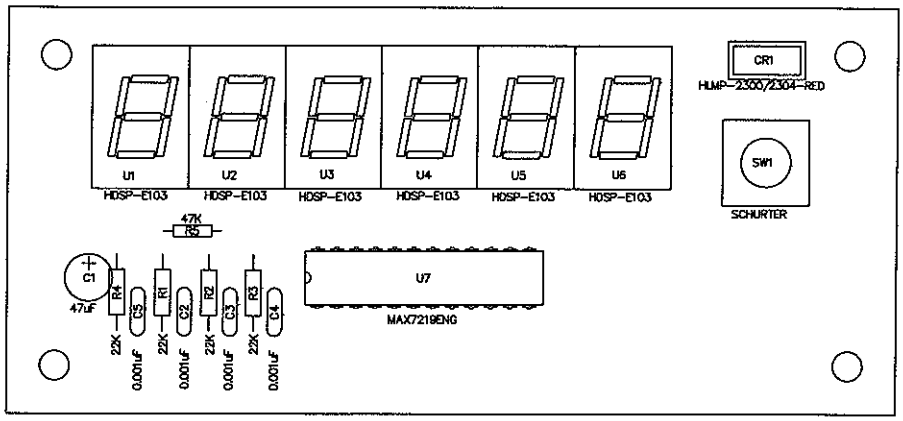

Drawn: JK	05-JUNE-00	Title: Display Board	
Design: RSS	21-JAN-98		
Check: RSS	6-28-01	Model: 2200	
Approve: R.C.	6-28-01	Board#: 5167-337	
Layer:		Rev: 1.0	Series 167 / Sheet 277
MID:		SCALE: 1.00	
16:05:43	28-Jun-2001		

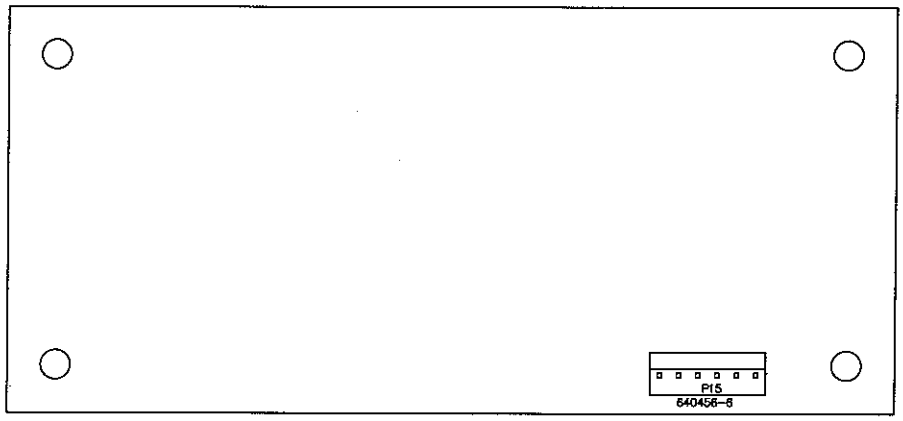

Drawn: JK	05-JUNE-00	Title: Display Board	
Design: RSS	21-JAN-98		
Check: RSS	6-28-01	Model: 2200	
Approve: R.C.	6-28-01	Board#: 5167-337	
Layer: BOTTOM OVERLAY Mech.1 Mech.2 Mech.3 Mech.4 MID: 16:05:43 28-Jun-2001		Rev: 1.0 SCALE: 1.00	Series 167 / Sheet 277

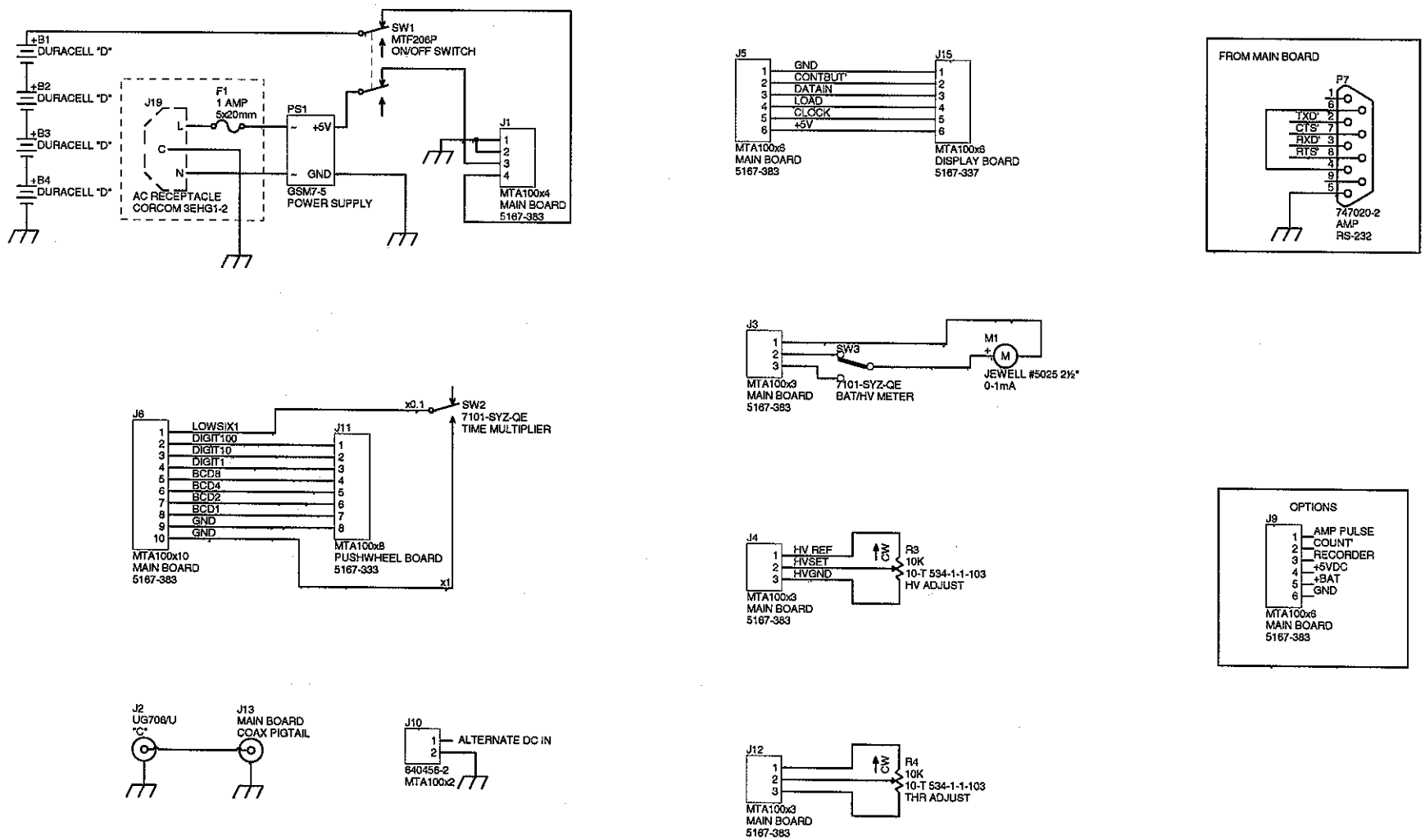

LUDLUM MEASUREMENTS, INC.

PO Box 810
501 Oak Street
Sweetwater, Texas 79556
U.S.A. 1-800-622-0828

Drawn: KKH	07-OCT-03	Title: WIRING DIAGRAM	
Design: RSS	07-OCT-03	Model: 2000	
Check:		Board#: 167-431	
Approve:	7 Oct 03	Sheet: 1 of 1	Series 167 / Sheet 433
13:54:35	7-Oct-2003	Rev: 2.0	

167X433